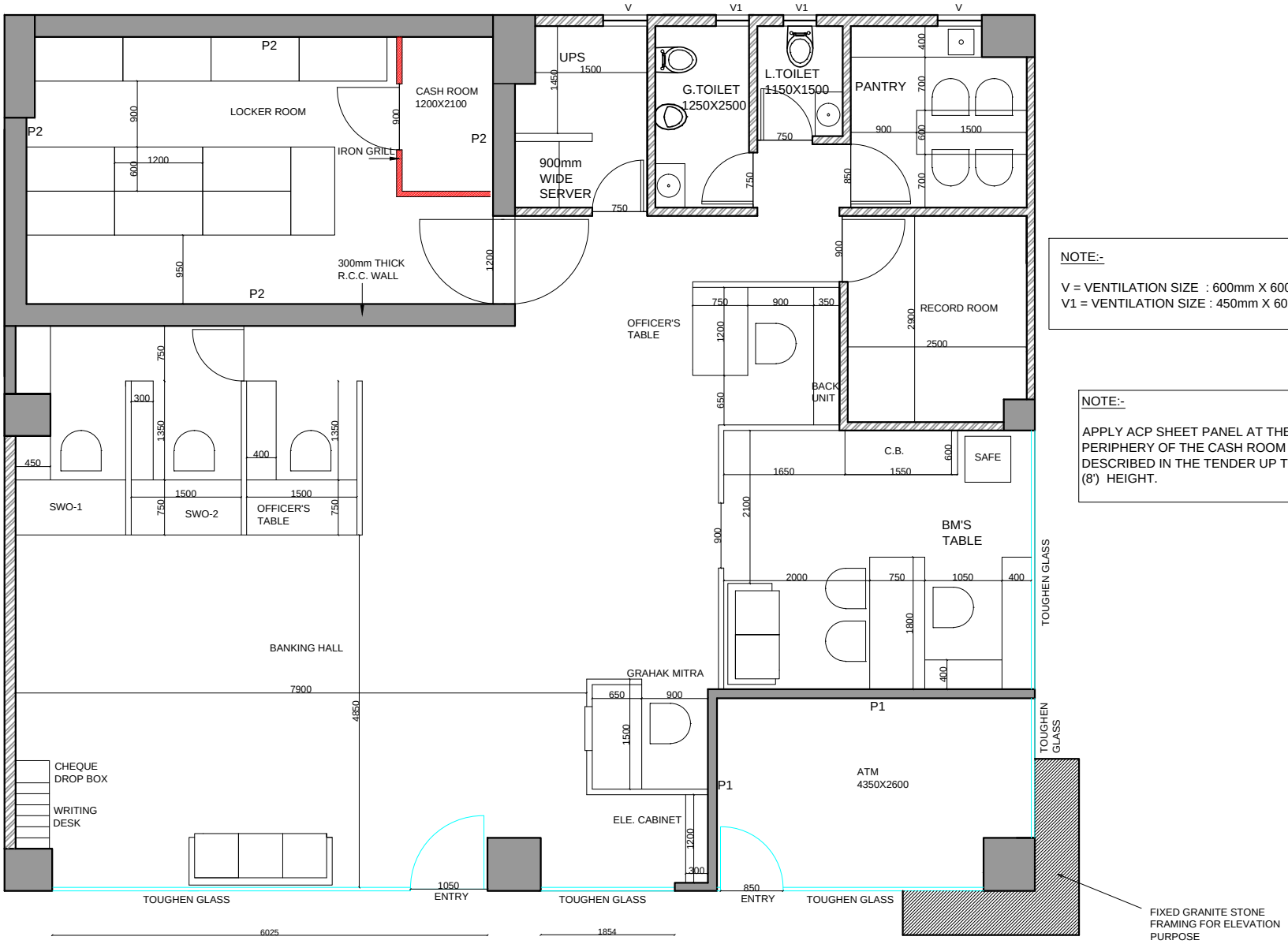

NOTE:-

V = VENTILATION SIZE : 600mm X 600mm(2 NOS.)
V1 = VENTILATION SIZE : 450mm X 600mm (2 NOS.)

NOTE:-

APPLY ACP SHEET PANEL AT THE OUTSIDE PERIPHERY OF THE CASH ROOM AS DESCRIBED IN THE TENDER UP TO 2400 mm (8') HEIGHT.

BB = 2946 mm
CLVL = 3378 mm
SILL LVL = 787 mm
LINTEL LVL = 724 mm FROM WINDOW TOP TO BB

PROPOSED FURNITURE LAYOUT

APPROVALS
CONSULTANT
ARCHITECT
SITE COORDINATOR

NOTES
1. ALL DIMENSIONS ARE IN FEET- INCHES & ARE TO BE READ NOT MEASURED.
2. DISCREPANCY FOUND IN DRG SHOULD BE BROUGHT TO THE ARCHITECT'S NOTICE IMMEDIATELY.
3. ARCH. DWGS. TO HAVE PRECEDENCE OVER STRL. DWGS. FOR POSITIONS AND DIMENSIONS.
4. FINISHED GROUND FLOOR IS AT 100'
5. LARGE SCALE DRGS TO HAVE PRECENDECE OVER SMALL SCALE DRGS
6. PLINTH OF THE EXISTING BUILDING IS AT 100'.

ABBREVIATIONS

REVISIONS

DATE	REVISION

SBI PRIME SHOPPERS BRANCH, VESU

PROPOSED FURNITURE LAYOUT

PROJ.NO. 1016
AWD.NO. 02
CHECK BY: DRAWN BY : PARTH DATE:- 10-07-19 SCALE NTS

ARCHITECT: VISHAL PAREKH
409/ KINARO, NR. MAKKAI POOL, NANPURA, SURAT-1
PH.NO: 98793 17886 e-mail: vishalvparekh@yahoo.com

NOTE :THIS DRAWING IS THE PROPERTY OF ARCHITECT VISHAL PAREKH & SHOULD NOT BE COPIED, REPRODUCED OR USED FOR ANY PURPOSE THAN SPECIFIED WITHOUT THE PRIOR PERMISSION OF THE ARCHITECT IN WRITING.

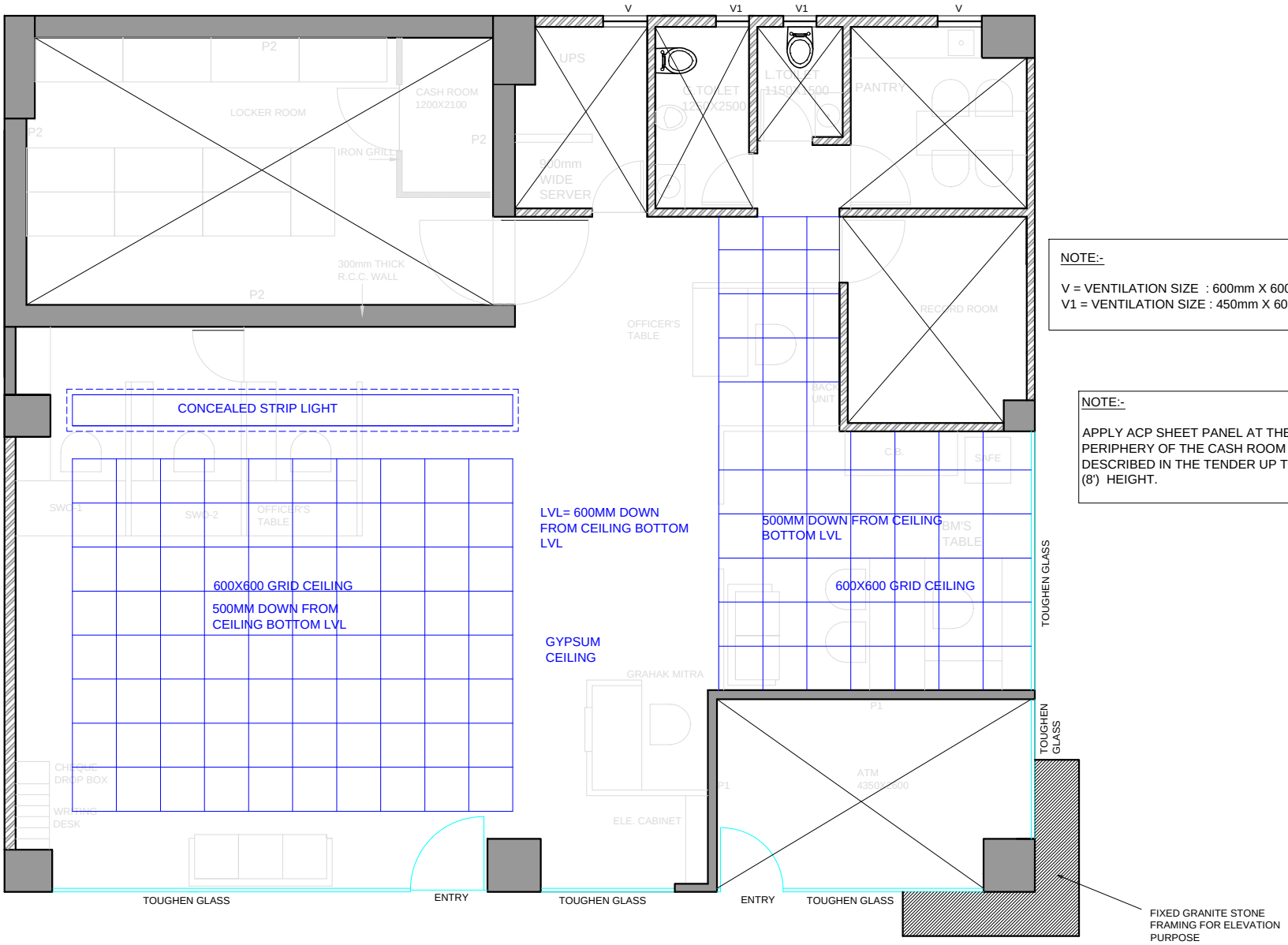

NOTE:-

V = VENTILATION SIZE : 600mm X 600mm(2 NOS.)
V1 = VENTILATION SIZE : 450mm X 600mm (2 NOS.)

NOTE:-

APPLY ACP SHEET PANEL AT THE OUTSIDE PERIPHERY OF THE CASH ROOM AS DESCRIBED IN THE TENDER UP TO 2400 mm (8') HEIGHT.

BB = 2946 mm
CLVL = 3378 mm
SILL LVL = 787 mm
LINTEL LVL = 724 mm FROM WINDOW TOP TO BB

PROPOSED FURNITURE LAYOUT

APPROVALS
CONSULTANT
ARCHITECT
SITE CO-ORDINATOR

NOTES
1. ALL DIMENSIONS ARE IN FEET- INCHES & ARE TO BE READ NOT MEASURED.
2. DISCREPANCY FOUND IN DRG SHOULD BE BROUGHT TO THE ARCHITECT'S NOTICE IMMEDIATELY.
3. ARCH. DWGS. TO HAVE PRECEDENCE OVER STRL. DWGS. FOR POSITIONS AND DIMENSIONS.
4. FINISHED GROUND FLOOR IS AT 100'
5. LARGE SCALE DRGS TO HAVE PRECENDECE OVER SMALL SCALE DRGS
6. PLINTH OF THE EXISTING BUILDING IS AT 100'.

ABBREVIATIONS

REVISIONS

DATE	REVISION

SBI PRIME SHOPPERS BRANCH, VESU

PROPOSED FURNITURE LAYOUT

PROJ.NO. 1016
AWD.NO. 02
CHECK BY: DRAWN BY : PARTH DATE:- 10-07-19 SCALE NTS

ARCHITECT: VISHAL PAREKH
409/ KINARO, NR. MAKKAI POOL, NANPURA, SURAT-1
PH.NO: 98793 17886 e-mail: vishalvparekh@yahoo.com

NOTE :THIS DRAWING IS THE PROPERTY OF ARCHITECT VISHAL PAREKH & SHOULD NOT BE COPIED, REPRODUCED OR USED FOR ANY PURPOSE THAN SPECIFIED WITHOUT THE PRIOR PERMISSION OF THE ARCHITECT IN WRITING.

MULTI PURPOSE LOCK- EBCO - E-MPL1-22

HINGES - S.S. MATT FINISH - EBCO

CHANNEL - EBCO- BMDS 35

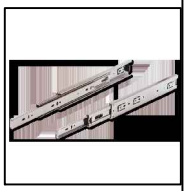

HANDLES - SS-202 MATT FINISH

VENEER-GREENPLY BURMA TEAK VENEER

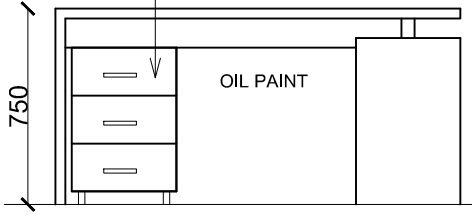

INTERNAL VIEW

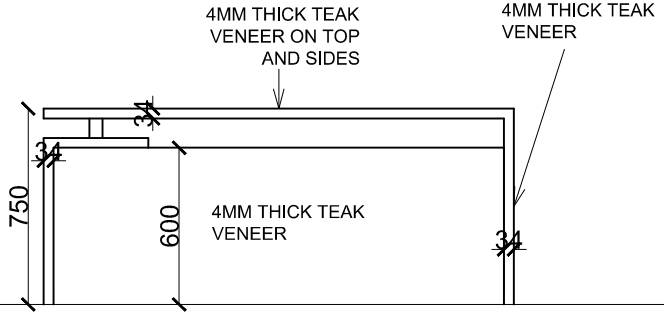

FRONT VIEW

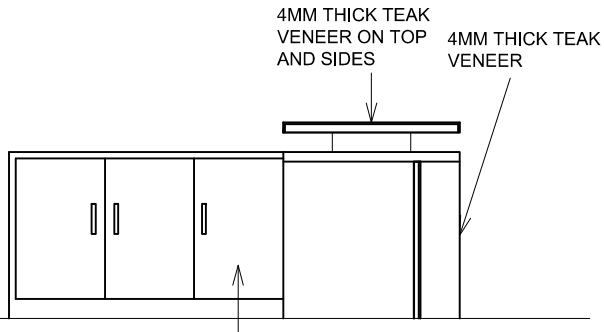

SECTION 'AA'

1MM THICK SOLID CORE WHITE LAMINATE

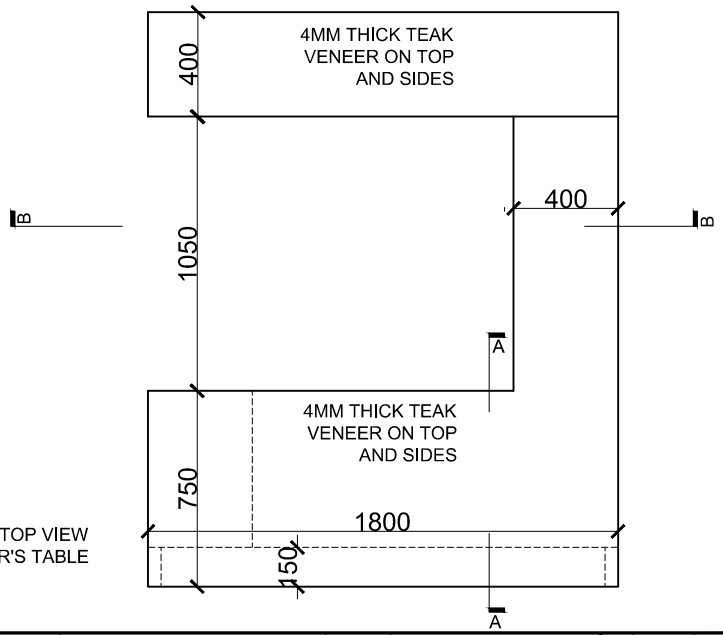

TOP VIEW
MANAGER'S TABLE

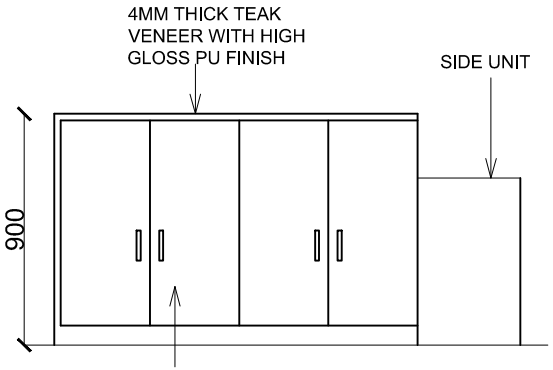

BACK UNIT

SECTION 'BB'

APPROVALS

CONSULTANT | ARCHITECT | SITE COORDINATOR

NOTES

1. ALL DIMENSIONS ARE IN FEET- INCHES & ARE TO BE READ NOT MEASURED.
2. DISCREPANCY FOUND IN DRG SHOULD BE BROUGHT TO THE ARCHITECT'S NOTICE IMMEDIATELY.
3. ARCH. DWGS. TO HAVE PRECEDENCE OVER STRL. DWGS. FOR POSITIONS AND DIMENSIONS.
4. FINISHED GROUND FLOOR IS AT 100'
5. LARGE SCALE DRGS TO HAVE PRECENDECE OVER SMALL SCALE DRGS
6. PLINTH OF THE EXISTING BUILDING IS AT 100'.

ABBREVIATIONS

REVISIONS

DATE	REVISION
	REFERENCE

SBI-PRIME SHOPPERS BRANCH, SURAT

MANAGER'S TABLE

PROJ.NO. 1016

AWD.NO. 01

CHECK BY: | DRAWN BY : VISHAL | DATE:- 10-07-19 | SCALE NTS

ARCHITECT: VISHAL PAREKH
409/ KINARO, NR. MAKKAI POOL, NANPURA, SURAT-1
PH.NO: 98793 17886 e-mail: vishalvparekh@yahoo.com

NOTE :THIS DRAWING IS THE PROPERTY OF ARCHITECT VISHAL PAREKH & SHOULD NOT BE COPIED, REPRODUCED OR USED FOR ANY PURPOSE THAN SPECIFIED WITHOUT THE PRIOR PERMISSION OF THE ARCHITECT IN WRITING.

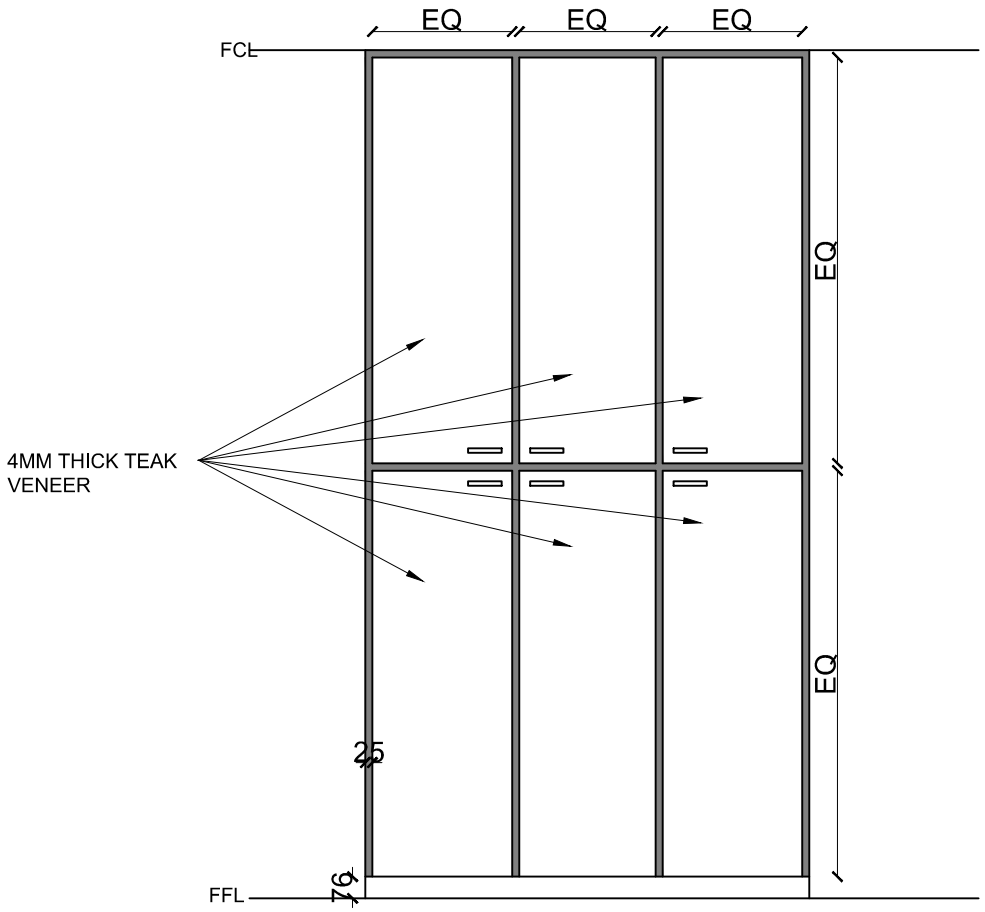

FRONT VIEW

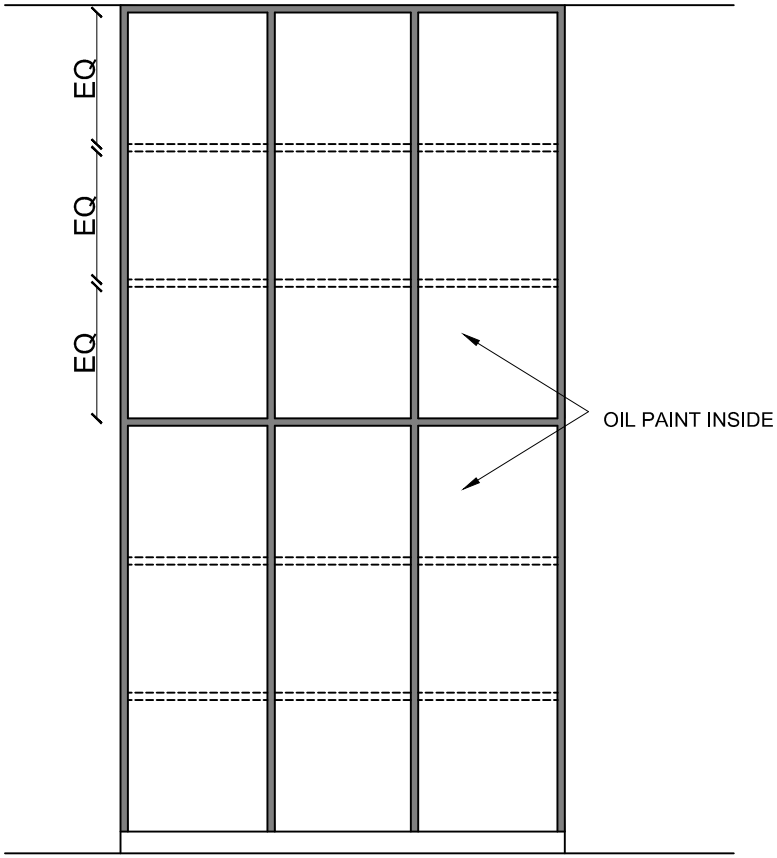

INTERNAL VIEW

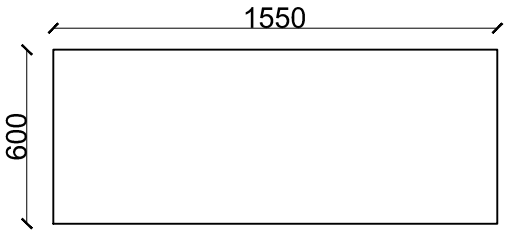

TOP VIEW

APPROVALS

CONSULTANT

ARCHITECT

SITE COORDINATOR

NOTES

NOTES
1. ALL DIMENSIONS ARE IN FEET- INCHES & ARE TO BE READ NOT MEASURED.
2. DISCREPANCY FOUND IN DRG SHOULD BE BROUGHT TO THE ARCHITECT'S NOTICE IMMEDIATELY.
3. ARCH. DWGS. TO HAVE PRECEDENCE OVER STRL. DWGS. FOR POSITIONS AND DIMENSIONS.
4. FINISHED GROUND FLOOR IS AT 100'
5. LARGE SCALE DRGS TO HAVE PRECENDECE OVER SMALL SCALE DRGS
6. PLINTH OF THE EXISTING BUILDING IS AT 100'.

ABBREVIATIONS

REVISIONS

DATE	REVISION
	REFERENCE

SBI-PRIME SHOPPERS BRANCH, SURAT

PROJ.NO. 1016

FULL HEIGHT CABINET IN BM'S CABIN

AWD.NO. 05

CHECK BY: | DRAWN BY : VISHAL | DATE:- 10-07-19 | SCALE NTS

ARCHITECT: VISHAL PAREKH
409/ KINARO, NR. MAKKAI POOL, NANPURA, SURAT-1
PH.NO: 98793 17886 e-mail: vishalvparekh@yahoo.com

NOTE :THIS DRAWING IS THE PROPERTY OF ARCHITECT VISHAL PAREKH & SHOULD NOT BE COPIED, REPRODUCED OR USED FOR ANY PURPOSE THAN SPECIFIED WITHOUT THE PRIOR PERMISSION OF THE ARCHITECT IN WRITING.

AUTO LOCK - EBCO - P-ALL1-22

MULTI PURPOSE LOCK- EBCO - E-MPL1-22

NIGHT LATCH - EUROPA 8010 NS

HINGES - S.S. MATT FINISH - EBCO

CHANNEL - EBCO- BMDS 35

HANDLES - SS-202 MATT FINISH

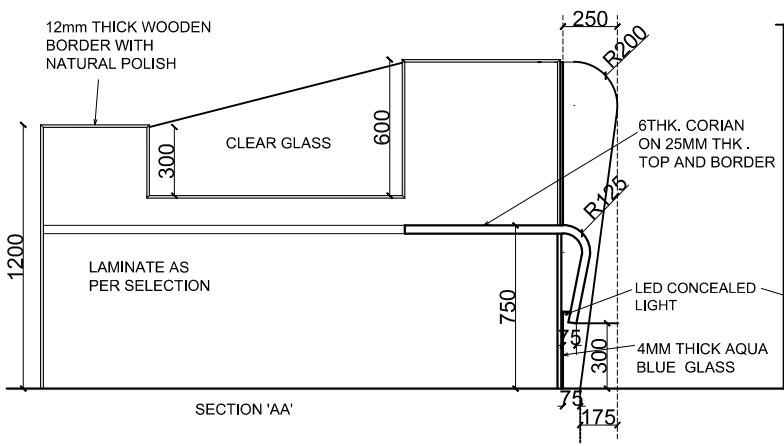

SECTION 'AA'

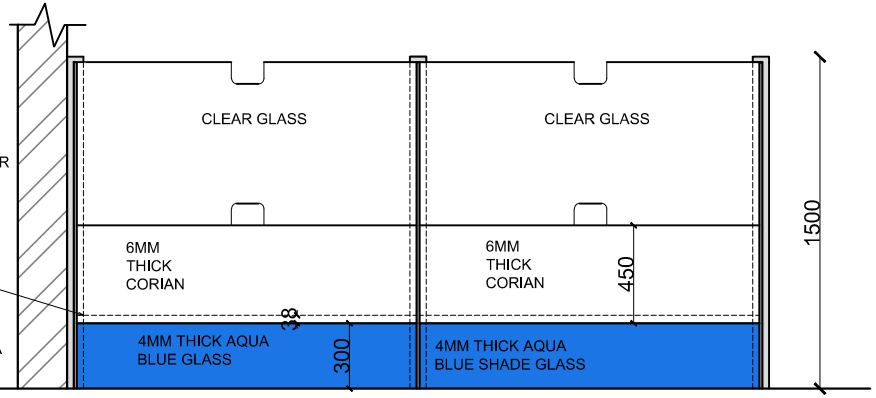

FRONT VIEW

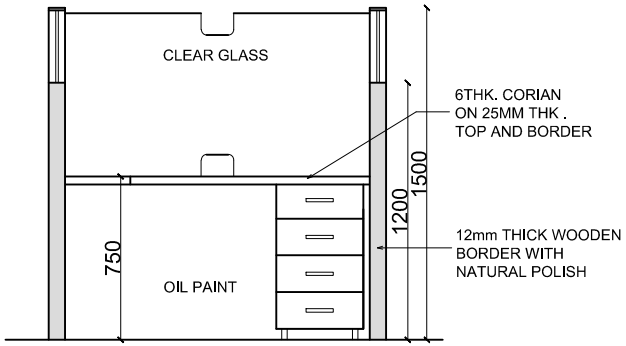

INTERNAL VIEW

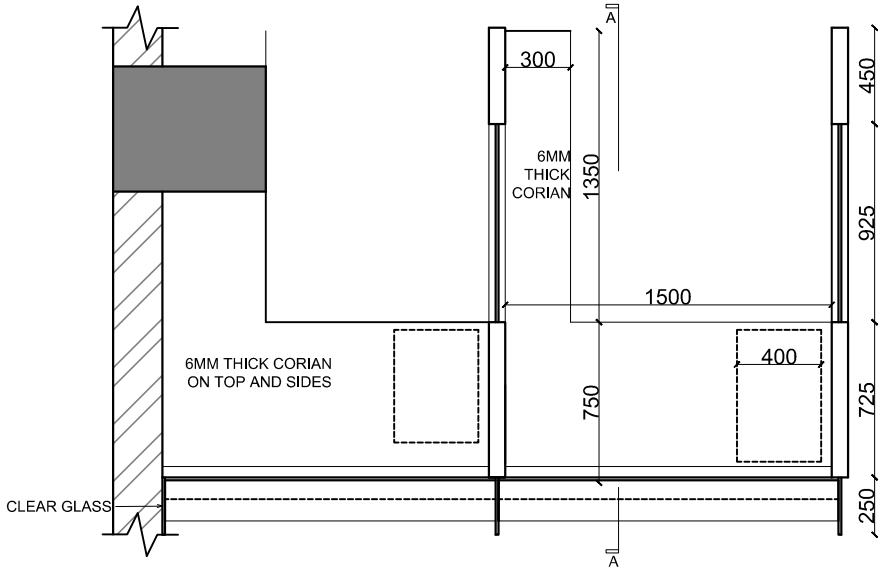

TOP VIEW
TYPICAL SINGLE WINDOW COUNTER

APPROVALS
CONSULTANT
ARCHITECT
SITE COORDINATOR

NOTES

1. ALL DIMENSIONS ARE IN FEET- INCHES & ARE TO BE READ NOT MEASURED.
2. DISCREPANCY FOUND IN DRG SHOULD BE BROUGHT TO THE ARCHITECT'S NOTICE IMMEDIATELY.
3. ARCH. DWGS. TO HAVE PRECEDENCE OVER STRL. DWGS. FOR POSITIONS AND DIMENSIONS.
4. FINISHED GROUND FLOOR IS AT 100'
5. LARGE SCALE DRGS TO HAVE PRECENDECE OVER SMALL SCALE DRGS
6. PLINTH OF THE EXISTING BUILDING IS AT 100'.

ABBREVIATIONS

REVISIONS

DATE	REVISION

SBI-PRIME SHOPPERS BRANCH, SURAT — PROJ.NO. 1016

TYPICAL SINGLE WINDOW COUNTER — AWD.NO. 07

CHECK BY: | DRAWN BY : VISHAL | DATE:- 10-07-19 | SCALE NTS

ARCHITECT: VISHAL PAREKH
409/ KINARO, NR. MAKKAI POOL, NANPURA, SURAT-1
PH.NO: 98793 17886 e-mail: vishalvparekh@yahoo.com

NOTE :THIS DRAWING IS THE PROPERTY OF ARCHITECT VISHAL PAREKH & SHOULD NOT BE COPIED, REPRODUCED OR USED FOR ANY PURPOSE THAN SPECIFIED WITHOUT THE PRIOR PERMISSION OF THE ARCHITECT IN WRITING.

MULTI PURPOSE LOCK- EBCO - E-MPL1-22

HINGES - S.S. MATT FINISH - EBCO

CHANNEL - EBCO- BMDS 35

HANDLES - SS-202 MATT FINISH

VENEER-GREENPLY BURMA TEAK VENEER

AICA LAMINATE-WP172 (DARK COLOUR AND SHOULD BE MATCHED WITH VENEER)

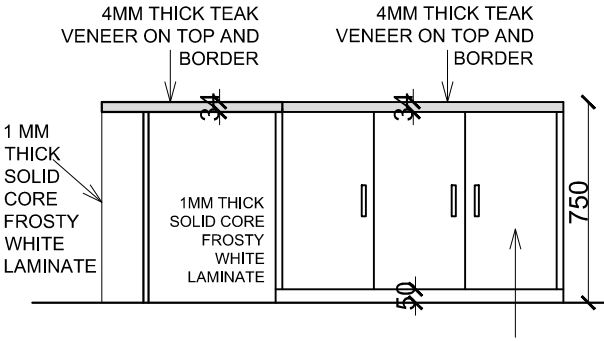

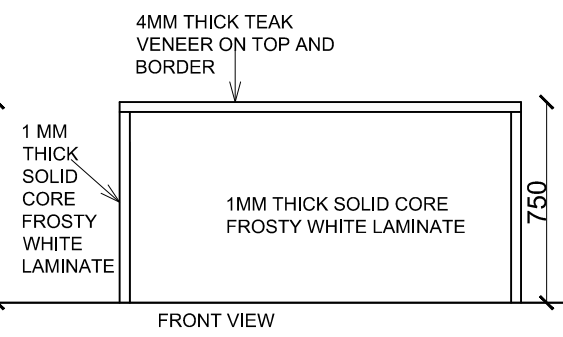

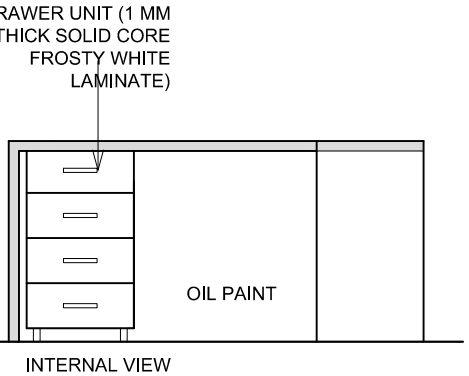

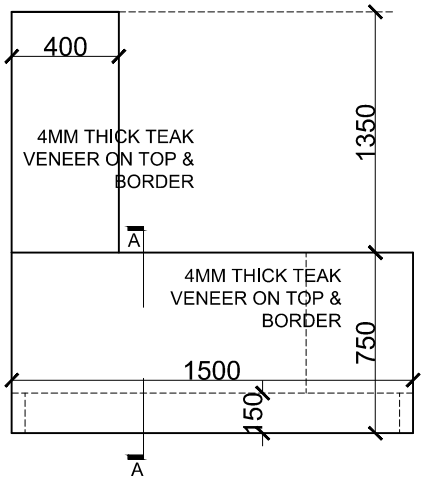

TOP VIEW
1500mm LONG OFFICER'S TABLE

APPROVALS

CONSULTANT | ARCHITECT | SITE COORDINATOR

NOTES

NOTES
1. ALL DIMENSIONS ARE IN FEET- INCHES & ARE TO BE READ NOT MEASURED.
2. DISCREPANCY FOUND IN DRG SHOULD BE BROUGHT TO THE ARCHITECT'S NOTICE IMMEDIATELY.
3. ARCH. DWGS. TO HAVE PRECEDENCE OVER STRL. DWGS. FOR POSITIONS AND DIMENSIONS.
4. FINISHED GROUND FLOOR IS AT 100'
5. LARGE SCALE DRGS TO HAVE PRECENDECE OVER SMALL SCALE DRGS
6. PLINTH OF THE EXISTING BUILDING IS AT 100'.

ABBREVIATIONS

REVISIONS

DATE	REVISION	REFERENCE

SBI-PRIME SHOPPERS BRANCH, SURAT — PROJ.NO. 1016

1500mm LONG OFFICER'S TABLE — AWD.NO. 05

CHECK BY: | DRAWN BY : VISHAL | DATE:- 10-07-19 | SCALE NTS

ARCHITECT: VISHAL PAREKH
409/ KINARO, NR. MAKKAI POOL, NANPURA, SURAT-1
PH.NO: 98793 17886 e-mail: vishalvparekh@yahoo.com

NOTE :THIS DRAWING IS THE PROPERTY OF ARCHITECT VISHAL PAREKH & SHOULD NOT BE COPIED, REPRODUCED OR USED FOR ANY PURPOSE THAN SPECIFIED WITHOUT THE PRIOR PERMISSION OF THE ARCHITECT IN WRITING.

MULTI PURPOSE LOCK- EBCO - E-MPL1-22

HINGES - S.S. MATT FINISH - EBCO

CHANNEL - EBCO- BMDS 35

HANDLES - SS-202 MATT FINISH

VENEER-GREENPLY BURMA TEAK VENEER

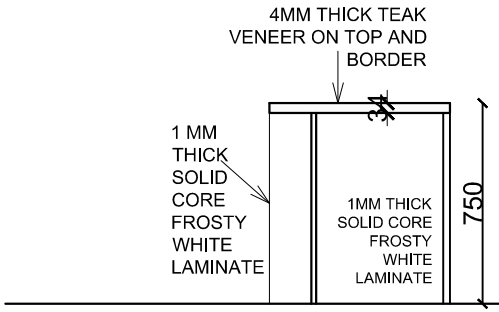

SECTION 'AA'

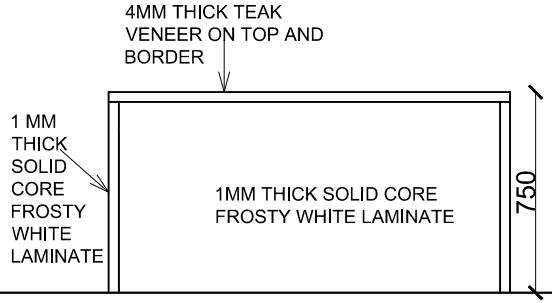

FRONT VIEW

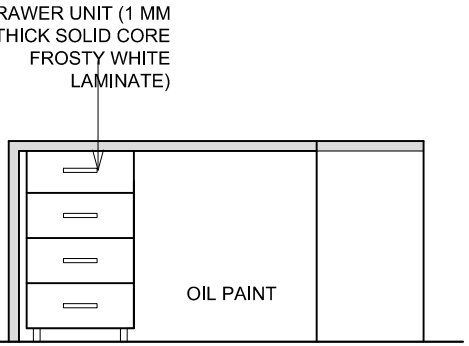

INTERNAL VIEW

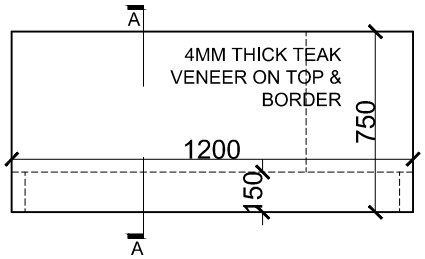

TOP VIEW
1200mm LONG OFFICER'S TABLE

APPROVALS			
CONSULTANT	ARCHITECT	SITE COORDINATOR	NOTES

NOTES
1. ALL DIMENSIONS ARE IN FEET- INCHES & ARE TO BE READ NOT MEASURED.
2. DISCREPANCY FOUND IN DRG SHOULD BE BROUGHT TO THE ARCHITECT'S NOTICE IMMEDIATELY.
3. ARCH. DWGS. TO HAVE PRECEDENCE OVER STRL. DWGS. FOR POSITIONS AND DIMENSIONS.
4. FINISHED GROUND FLOOR IS AT 100'
5. LARGE SCALE DRGS TO HAVE PRECENDECE OVER SMALL SCALE DRGS
6. PLINTH OF THE EXISTING BUILDING IS AT 100'.

ABBREVIATIONS

REVISIONS	DATE	REVISION
		REFERENCE

SBI-PRIME SHOPPERS BRANCH, SURAT — PROJ.NO. 1016

1200mm LONG OFFICER'S TABLE — AWD.NO. 05

CHECK BY: | DRAWN BY : VISHAL | DATE:- 10-07-19 | SCALE NTS

ARCHITECT: VISHAL PAREKH
409/ KINARO, NR. MAKKAI POOL, NANPURA, SURAT-1
PH.NO: 98793 17886 e-mail: vishalvparekh@yahoo.com

NOTE :THIS DRAWING IS THE PROPERTY OF ARCHITECT VISHAL PAREKH & SHOULD NOT BE COPIED, REPRODUCED OR USED FOR ANY PURPOSE THAN SPECIFIED WITHOUT THE PRIOR PERMISSION OF THE ARCHITECT IN WRITING.

MULTI PURPOSE LOCK- EBCO - E-MPL1-22

HINGES - S.S. MATT FINISH - EBCO

CHANNEL - EBCO- BMDS 35

HANDLES - SS-202 MATT FINISH

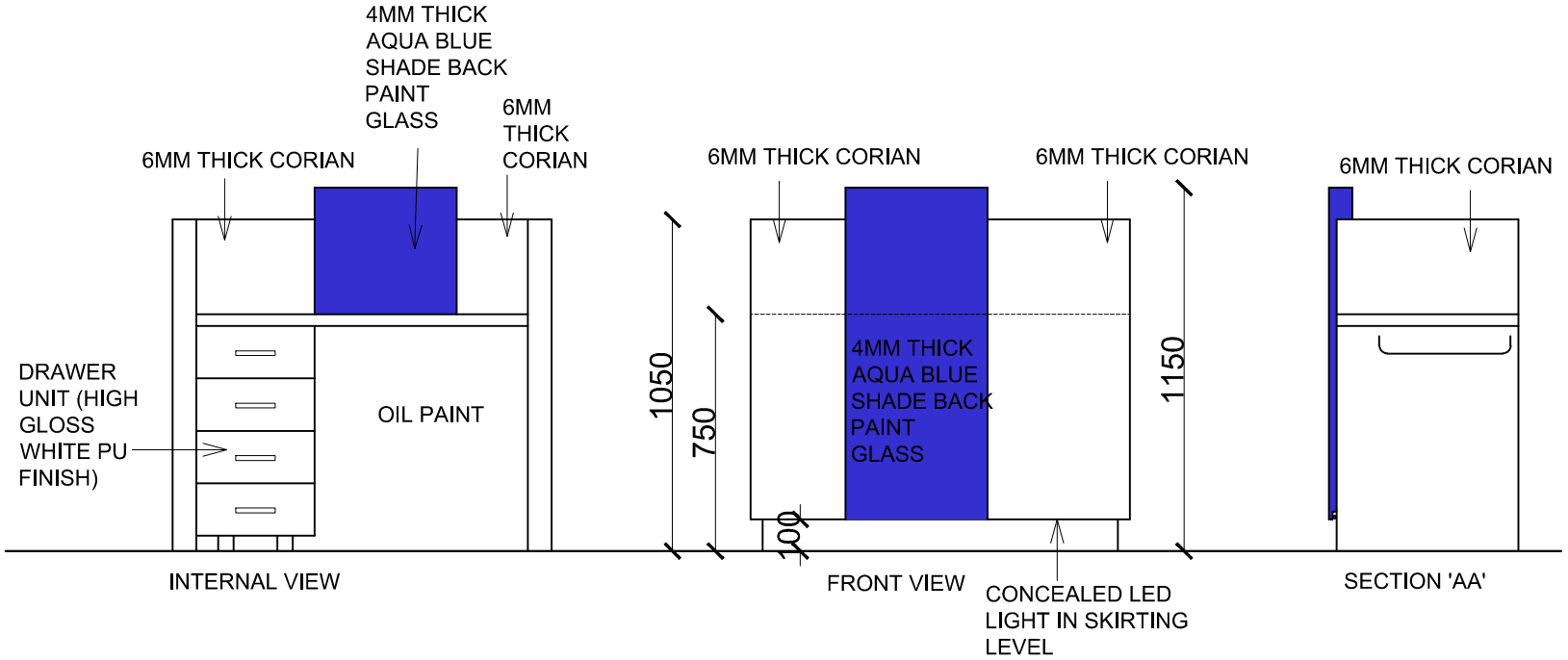

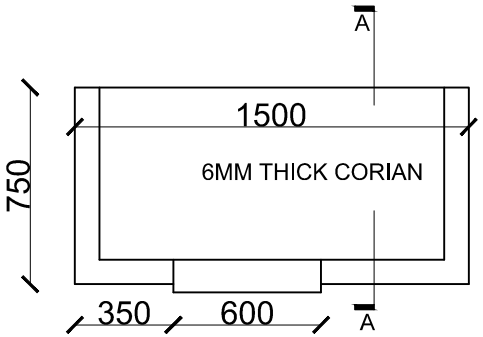

TOP VIEW
GRAHAK MITRA
(1500mm LONG)

APPROVALS
CONSULTANT
ARCHITECT
SITE COORDINATOR

NOTES

1. ALL DIMENSIONS ARE IN FEET- INCHES & ARE TO BE READ NOT MEASURED.
2. DISCREPANCY FOUND IN DRG SHOULD BE BROUGHT TO THE ARCHITECT'S NOTICE IMMEDIATELY.
3. ARCH. DWGS. TO HAVE PRECEDENCE OVER STRL. DWGS. FOR POSITIONS AND DIMENSIONS.
4. FINISHED GROUND FLOOR IS AT 100'
5. LARGE SCALE DRGS TO HAVE PRECENDECE OVER SMALL SCALE DRGS
6. PLINTH OF THE EXISTING BUILDING IS AT 100'.

ABBREVIATIONS

REVISIONS

DATE	REVISION
	REFERENCE

SBI-PRIME SHOPPERS BRANCH, SURAT

'GRAHAK MITRA' TABLE

PROJ.NO. 1016

AWD.NO. 03

CHECK BY: | DRAWN BY : VISHAL | DATE:- 10-07-19 | SCALE NTS

ARCHITECT: VISHAL PAREKH
409/ KINARO, NR. MAKKAI POOL, NANPURA, SURAT-1
PH.NO: 98793 17886 e-mail: vishalvparekh@yahoo.com

NOTE :THIS DRAWING IS THE PROPERTY OF ARCHITECT VISHAL PAREKH & SHOULD NOT BE COPIED, REPRODUCED OR USED FOR ANY PURPOSE THAN SPECIFIED WITHOUT THE PRIOR PERMISSION OF THE ARCHITECT IN WRITING.

MULTI PURPOSE LOCK- EBCO - E-MPL1-22

HINGES - S.S. MATT FINISH - EBCO

CHANNEL - EBCO- BMDS 35

HANDLES - SS-202 MATT FINISH

VENEER-GREENPLY BURMA TEAK VENEER

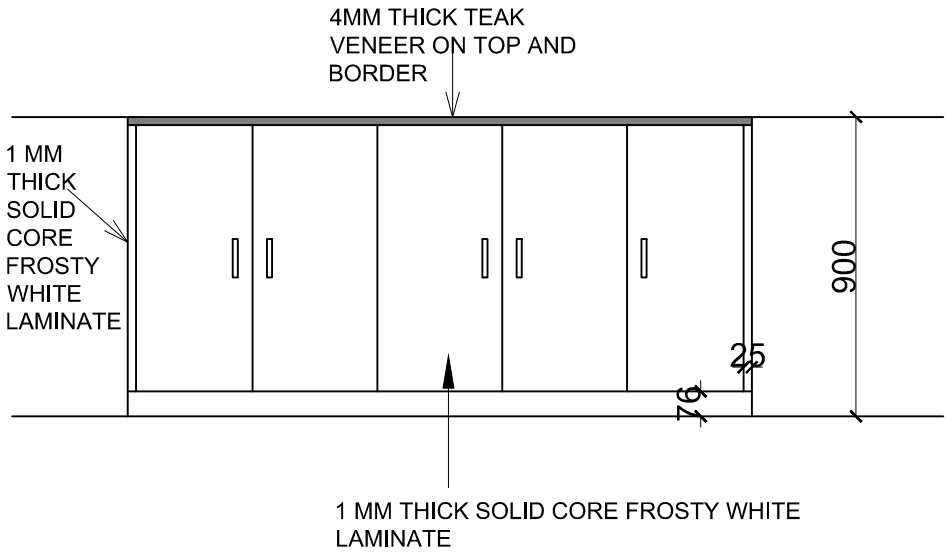

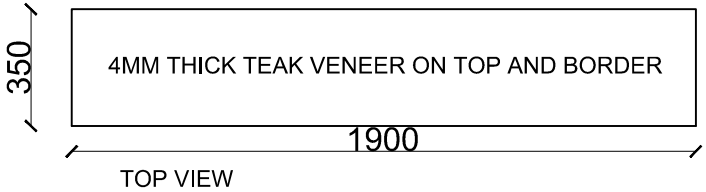

TOP VIEW

APPROVALS

CONSULTANT

ARCHITECT

SITE COORDINATOR

NOTES

NOTES
1. ALL DIMENSIONS ARE IN FEET- INCHES & ARE TO BE READ NOT MEASURED.
2. DISCREPANCY FOUND IN DRG SHOULD BE BROUGHT TO THE ARCHITECT'S NOTICE IMMEDIATELY.
3. ARCH. DWGS. TO HAVE PRECEDENCE OVER STRL. DWGS. FOR POSITIONS AND DIMENSIONS.
4. FINISHED GROUND FLOOR IS AT 100'
5. LARGE SCALE DRGS TO HAVE PRECENDECE OVER SMALL SCALE DRGS
6. PLINTH OF THE EXISTING BUILDING IS AT 100'.

ABBREVIATIONS

REVISIONS

DATE	REVISION
	REFERENCE

SBI-PRIME SHOPPERS BRANCH, SURAT

BACK UNIT B/H OFFICER'S TABLE

PROJ.NO. 1016

AWD.NO. 05

CHECK BY: | DRAWN BY : VISHAL | DATE:- 10-07-19 | SCALE NTS

ARCHITECT: VISHAL PAREKH
409/ KINARO, NR. MAKKAI POOL, NANPURA, SURAT-1
PH.NO: 98793 17886 e-mail: vishalvparekh@yahoo.com

NOTE :THIS DRAWING IS THE PROPERTY OF ARCHITECT VISHAL PAREKH & SHOULD NOT BE COPIED, REPRODUCED OR USED FOR ANY PURPOSE THAN SPECIFIED WITHOUT THE PRIOR PERMISSION OF THE ARCHITECT IN WRITING.

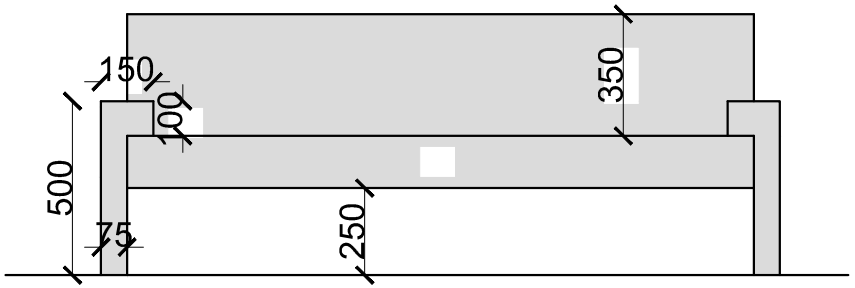

FRONT VIEW

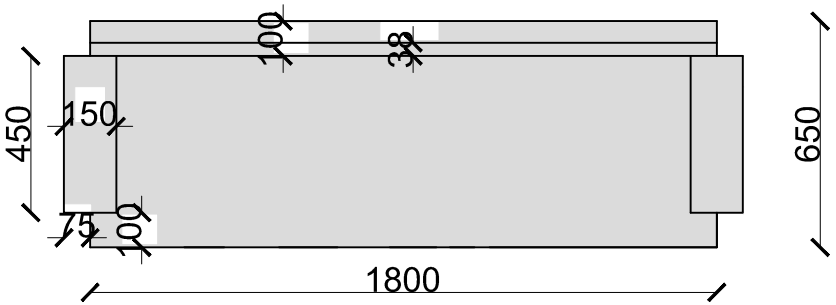

LEATHER SOFA- 2 NOS.
TOP VIEW

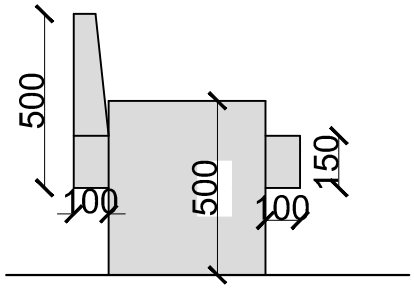

SIDE VIEW

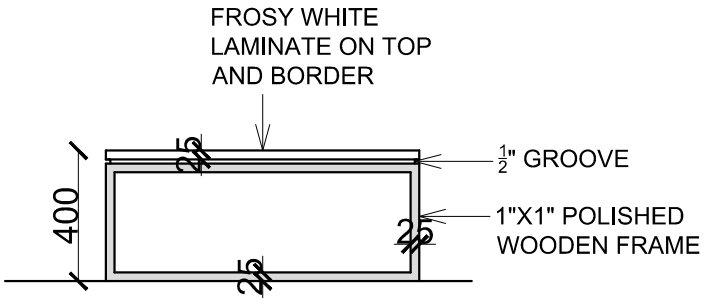

FRONT
VIEW

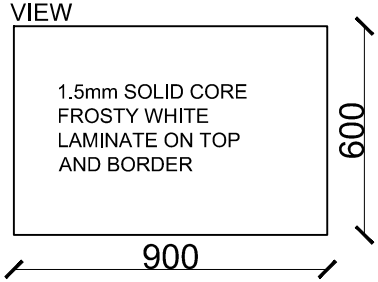

TOP VIEW
CENTRE TABLE

APPROVALS
CONSULTANT
ARCHITECT
SITE COORDINATOR

NOTES

NOTES
1. ALL DIMENSIONS ARE IN FEET- INCHES & ARE TO BE READ NOT MEASURED.
2. DISCREPANCY FOUND IN DRG SHOULD BE BROUGHT TO THE ARCHITECT'S NOTICE IMMEDIATELY.
3. ARCH. DWGS. TO HAVE PRECEDENCE OVER STRL. DWGS. FOR POSITIONS AND DIMENSIONS.
4. FINISHED GROUND FLOOR IS AT 100'
5. LARGE SCALE DRGS TO HAVE PRECENDECE OVER SMALL SCALE DRGS
6. PLINTH OF THE EXISTING BUILDING IS AT 100'.

ABBREVIATIONS

REVISIONS

DATE	REVISION	REFERENCE

SBI-PRIME SHOPPERS BRANCH, SURAT — PROJ.NO. 1016
SOFA & CENTRE TABLE — AWD.NO. 02
CHECK BY: — DRAWN BY : VISHAL — DATE:- 10-07-19 — SCALE NTS

ARCHITECT: VISHAL PAREKH
409/ KINARO, NR. MAKKAI POOL, NANPURA, SURAT-1
PH.NO: 98793 17886 e-mail: vishalvparekh@yahoo.com

NOTE :THIS DRAWING IS THE PROPERTY OF ARCHITECT VISHAL PAREKH & SHOULD NOT BE COPIED, REPRODUCED OR USED FOR ANY PURPOSE THAN SPECIFIED WITHOUT THE PRIOR PERMISSION OF THE ARCHITECT IN WRITING.